T-BOARD V3
Seat Fitting Guide



Fitting a new kart seat is one of the most important and time-consuming tasks in kart setup. Even a small 5mm positioning error can significantly affect lap times. The **T-Board V3** has been developed to ensure the seat is installed accurately and consistently, regardless of driver size or chassis configuration.

---

1 USING THE T-BOARD V3

The **T-Board V3** clamps securely to the chassis and uses adjustable nylon spacers to accurately set seat height. This allows the seat position to be adapted for different chassis configurations, driver sizes and non standard positions such as historic karts.

2 CHASSIS TUBE SPACER SETUP

The **T-Board V3** clamp is designed around 32 mm chassis tubes, with spacer combinations used to achieve the correct seat height with other tube diameters.

32MM CHASSIS

- ✓ Fit one **2 mm spacer** and **one 5 mm nylon spacer** on each end clamp.
- ✓ This positions the seat **5 mm below the chassis tubes,** which is the recommended starting position.

30MM CHASSIS

- ✓ Fit one **5 mm nylon spacer** only.
- ✓ This provides the same seat position as the 32 mm setup.

28MM CHASSIS

- ✓ Fit a **4 mm spacer** under each T Plate mounting point.
- ✓ Also fit **one 2 mm spacer** and **one 5 mm nylon spacer** on each end clamp to achieve a low position, 5mm below the tubes.

3 T-BOARD INSTALLATION

To lift the seat for a very small driver add spacers under the T plates as necessary. The T plates can be separated, to allow the small 1 mm central ridge present in all composite Tillett seats to sit in the gap, thus keeping the seat perfectly square. The plates can be moved apart to make sure you have enough space wherever the seat is set. See Fig. 3.

When attaching the **T-Board V3,** you should avoid placing clamps on brake pipes, welds and cable ties, otherwise the accuracy will be compromised Once the board is in place you can begin to position the seat.

Viewed from underneath, the two T plates are shown apart to allow for the Tillett seat mould line.

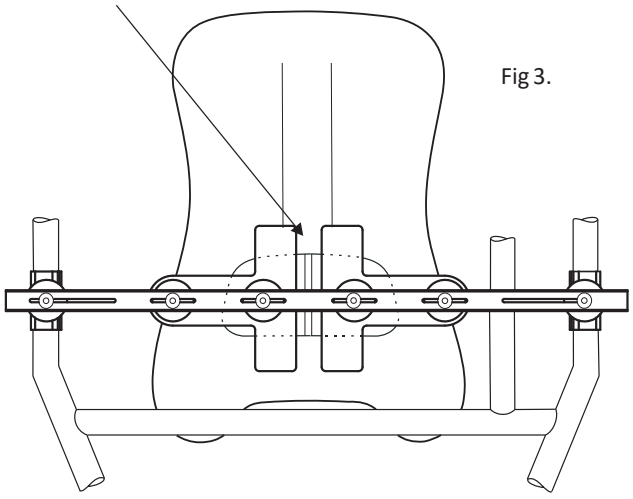

Fig 3.

⚠ Safety Warning. The T Board is not designed to take the weight of a driver. Do not sit in the seat until it is bolted into the chassis.

T-BOARD V3
Seat Fitting Guide

4 SETTING THE SEAT POSITION

PREPARE THE SEAT STAYS

- ✓ Ensure the seat is not squeezed between the main seat stays.
- ✓ Adjust the left-hand stay outward if necessary.
- ✓ Use hard spacers to fill any gaps instead of bending the stay inward.
- ✓ Align all seat tabs so they are parallel with the seat shell.

POSITION THE SEAT

- ✓ Measure the seat gap to the rear axle surface using a tape measure.
- ✓ Use the flat base of the seat to establish the correct back angle.
- ✓ Measure from the axle to the closest point of the seat **see Fig. 1**
- ✓ Always measure from one side of the spine recess rather than the centreline as spine depths vary.
- ✓ Hold the measuring rule at 90° to the axle and account for axle diameter when taking measurements.

Fig. 1.

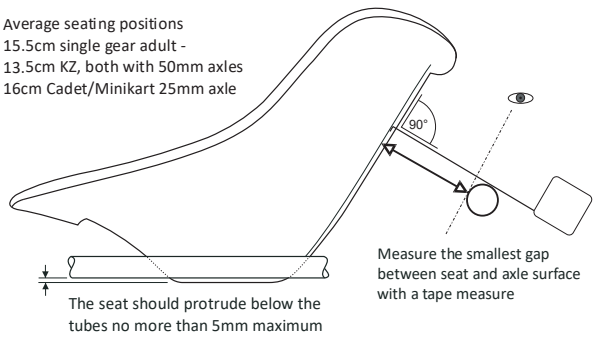

STARTING DIMENSIONS GUIDE

Use the following measurements as an initial setup:

Driver/Chassis	Seat-to-Axle Distance
Adult (70 kg, 1.80m, 50 mm axle)	15.5 cm
KZ chassis	13.5 cm
Junior driver	18 cm
Cadet/Minikart (25 mm axle)	15–16 cm

5 FINAL INSTALLATION

If additional ballast is mounted behind the seat, reposition the seat further forward to maintain balance. Fill any gaps between the seat and seat stays using nylon or aluminium spacers, and avoid using rubber spacers, as they can cause movement that damages the seat and wears slots into the composite.

- ✓ Mark the four mounting hole positions using a paint-marked bolt without moving the seat.
- ✓ Ensure the bolt passes through the seat stays at 90°, especially where spacers are required.
- ✓ Drill all four holes accurately and use the correct spacers to prevent distortion of the seat.
- ✓ Fit all mounting bolts loosely before fully tightening, then remove the **T-Board V3.**
- ✓ Install any additional seat stays and ballast after the seat has been secured.

BALLAST & ACCESSORIES

- ✓ Space side and front ballast slightly away from the seat using nylon washers to reduce stress and prevent cracking.
- ✓ Bend front ballast into an arc to avoid deforming the seat.
- ✓ Drill cable tie holes at least 5 mm from the seat edge to prevent cracking.

DRIVER COMFORT

- ✓ Position seat stay bolts away from the upper edge of the seat to reduce rib pressure.
- ✓ Use low-profile washers around the rib area where possible.
- ✓ Keep countersunk washers for ballast fixings away from areas that contact the pelvis and femur.

RECORD THE SETUP

Once the optimum seat position has been established, record:

- ✓ **Seat-to-axle surface measurement**
- ✓ **Seat low-point dimension**
- ✓ **Steering wheel-to-seat measurement**
- ✓ **Seat-to-pedal measurement**
- ✓ **Seat size, shape and rigidity**

For wet-weather use, drill two drainage holes at the lowest point of the seat.

✓ **Your seat is now ready for use on the track.**